Learn Arduino

Distinctive Objects

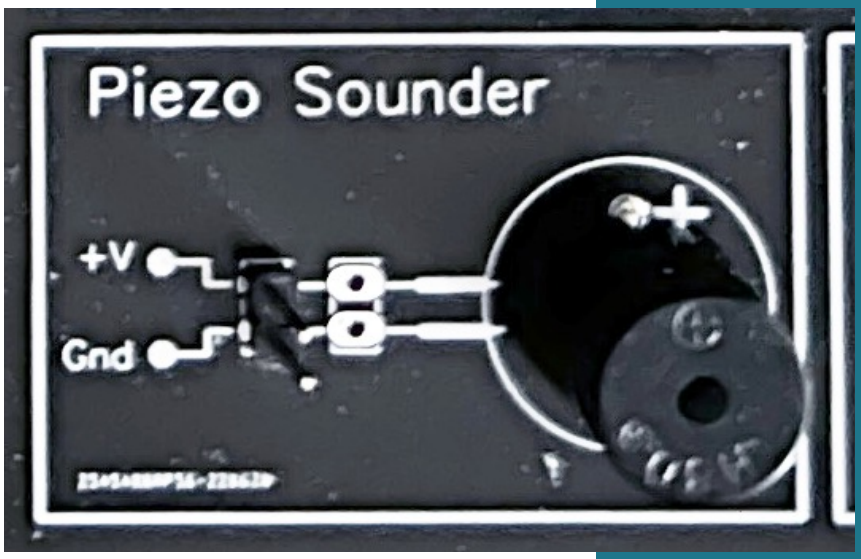

The Buzzer

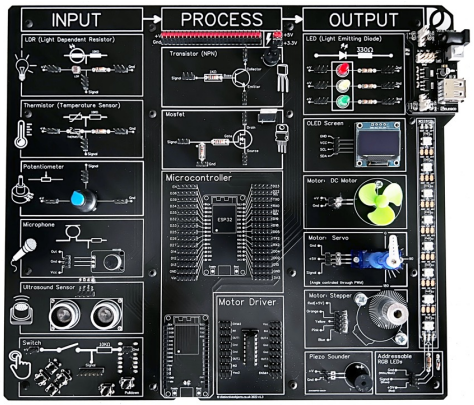

Making a buzz - Sounds from an Active Buzzer. Board v1.1-1.3

The circuit diagram for our buzzer is one of the simplest we will be looking at in our course, being that it is only 2 connections, and these can be made directly to the ESP32 Microcontroller's pins.

The buzzer included on the Learn Arduino is capable of running up to 5v so the 3.3v outputted directly from the pins is well under the threshold. We are going to use pin D04 and Gnd.

Circuit Diagram

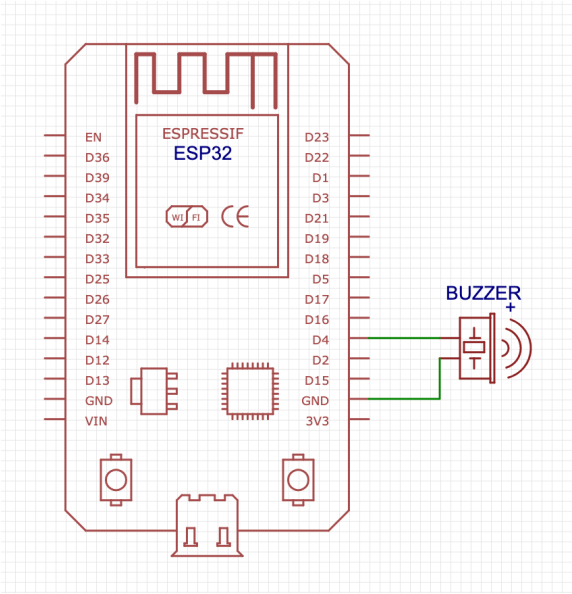

The layout

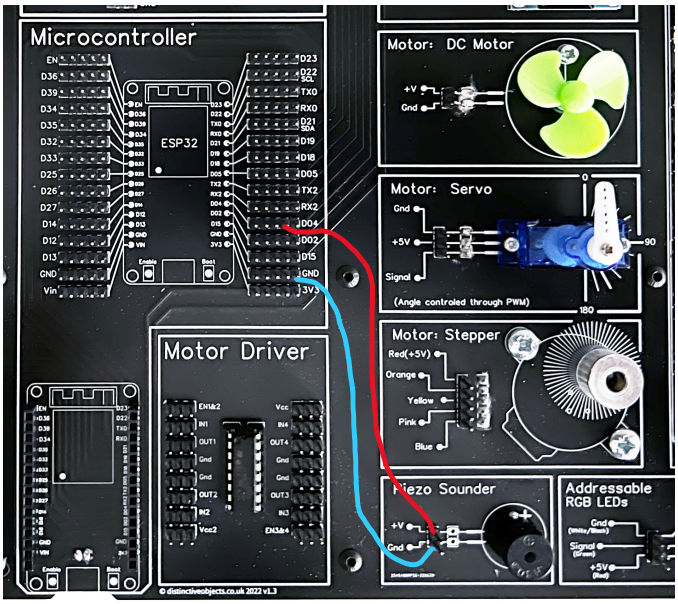

The simplest place to start here is to simply send a voltage to the pin as this should give up a sound with little effort. Let's use the blink example that we used when we got our LEDs running for the first time:

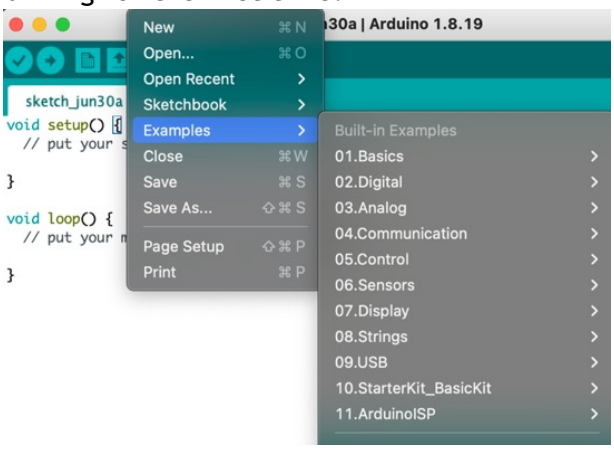

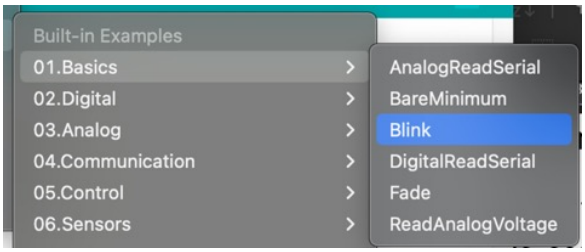

Once this has opened, change anywhere you see LED_BUILTIN to the number 4 as this is where we have attached our buzzer.

```
// the setup function runs once when you press reset or power the board
void setup() {
  // initialize digital pin 4 as an output.
  pinMode(4, OUTPUT);
}

// the loop function runs over and over again forever
void loop() {
  digitalWrite(4, HIGH);   // turn the Buzzer on (HIGH is the voltage level)
  delay(1000);                       // wait for a second
  digitalWrite(4, LOW);    // turn the Buzzer off by making the voltage LOW
  delay(1000);                       // wait for a second
}
```

UPLOAD THE SKETCH.